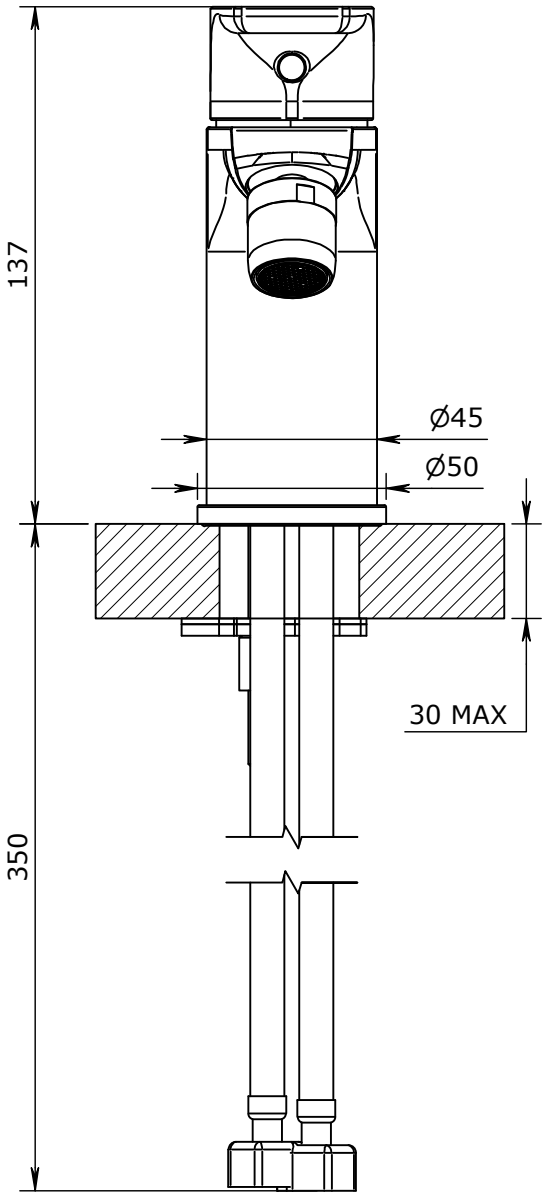
137
Ø45
Ø50
30 MAX
350

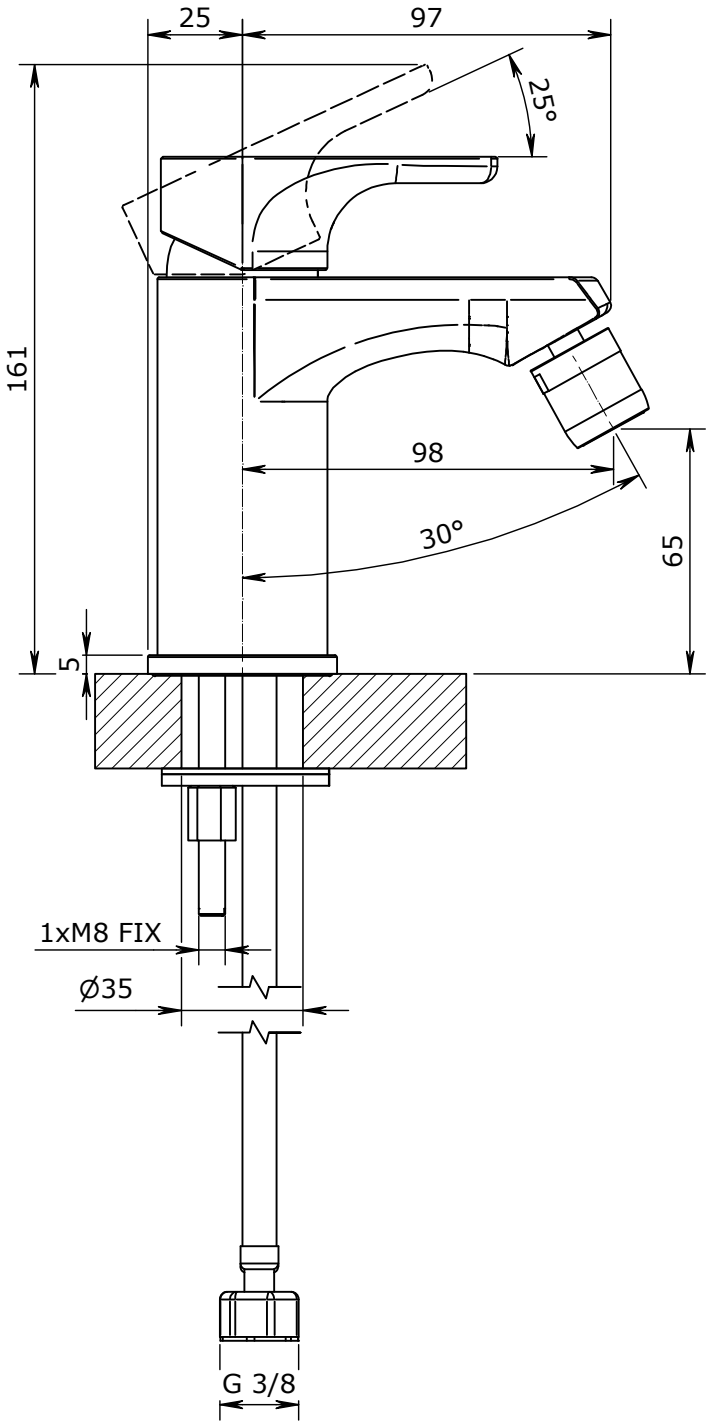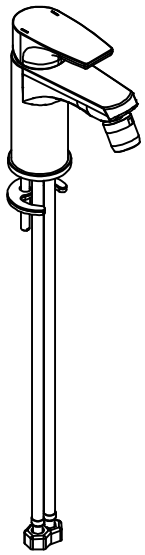
25
97
25°
161
98
30°
65
5
1xM8 FIX
Ø35
G 3/8