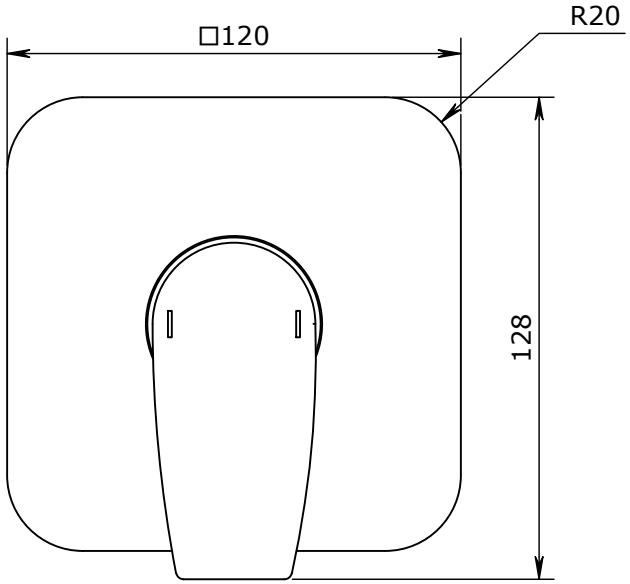
□120
R20
128

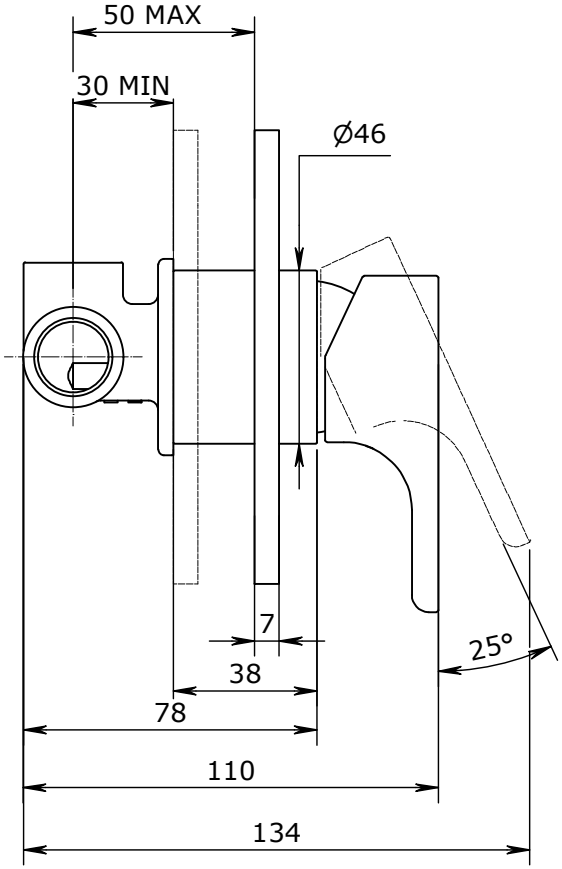
50 MAX
30 MIN
Ø46
7
38
78
110
134
25°

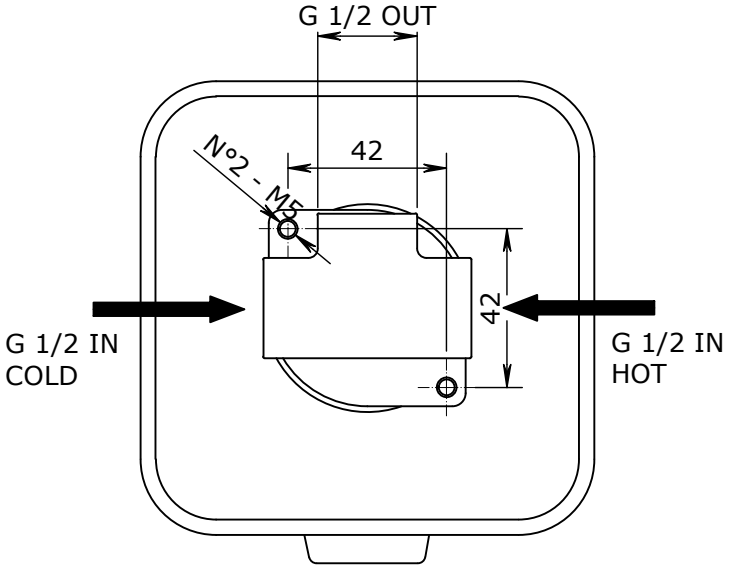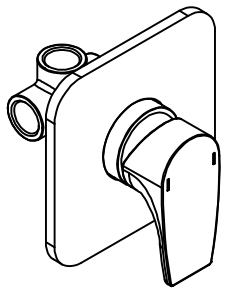
G 1/2 OUT
42
N°2 - M5
42
G 1/2 IN
COLD
G 1/2 IN
HOT